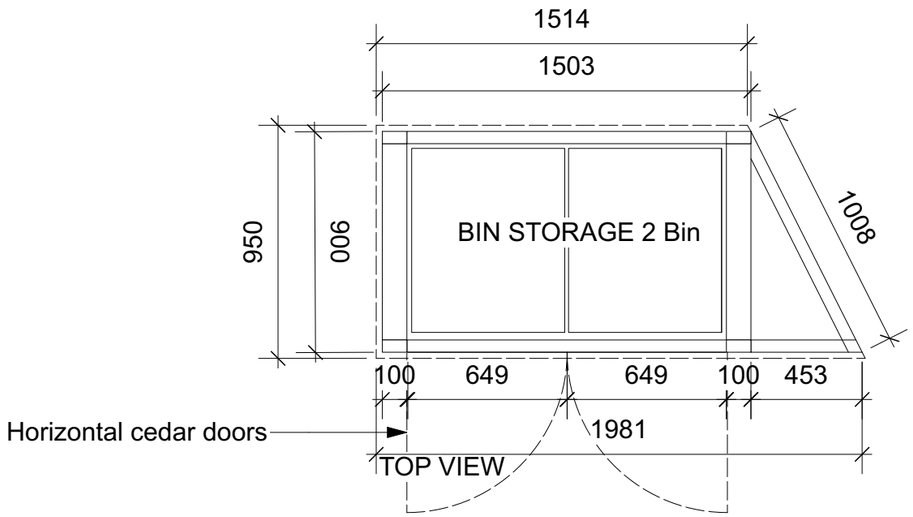

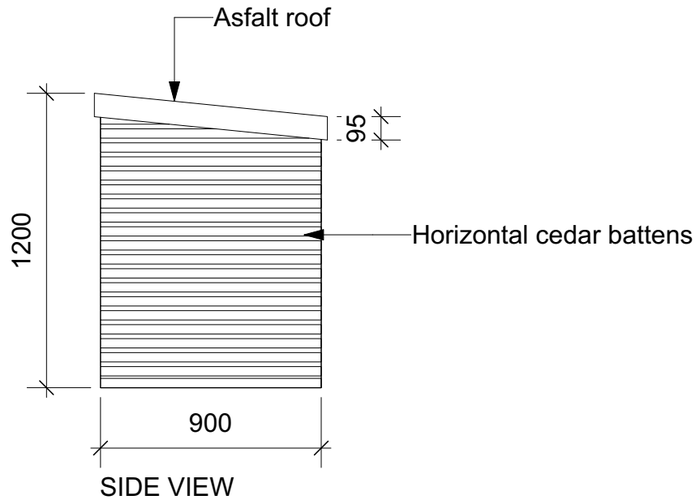

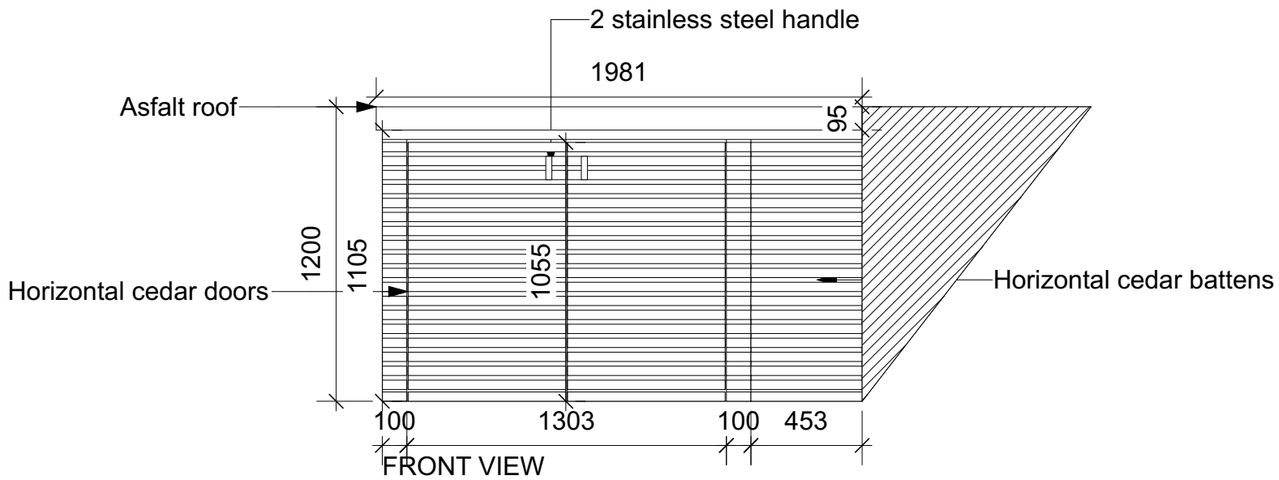

0 5m

DRAWINGS NOT FOR CONSTRUCTION

PROJECT:	51 Willow Rd, London NW3 1TP, UK		
CLIENT:	Sandeep Parmar		
DRAWING:	Bin storage		
SCALE:	1:25	**DRAWN:**	EB
DATE:	06/02/2025	**CHECKED:**	KE
DRAWING NO:	D08	**REV:**	A

Kate Eyre Garden Design
+44 (0) 7976 916318
www.eyre-design.co.uk
PE.FO3 Parkhall Business Centre
40 Markell Road, SE21 8EN